KStrong® BRUTE-AL™ 20 ft. Aluminum Housing Cable SRL with snap hook. Includes installation carabiner and tagline (ANSI).

Model: UFS480020

20' Cable SRL, swivel eye at anchorage end, other end load indicator swivel snap hook. Includes installation carabiner and tagline

DESIGN

- Robust & durable Aluminum casing powder coated
- Has swivel anchorage eye at anchorage end
- Steel swivel snap hook at retractable end - gate strength 3600 lbs. (1633 kg)
- Galvanized steel wire rope

CABLE

Material: Galvanized steel wire rope Ø3/16"
Minimum Breaking Strength: 3400 lbs.

LENGTH

20 Feet

WEIGHT

10 lbs. ± 0.22 lbs. (4536 gm ±100 gm)

RELEVANT STANDARDS

Meets or Exceeds ANSI Z359.14-2021 Class 1

Class 1
Anchor at or above dorsal D-ring

FRONT VIEW

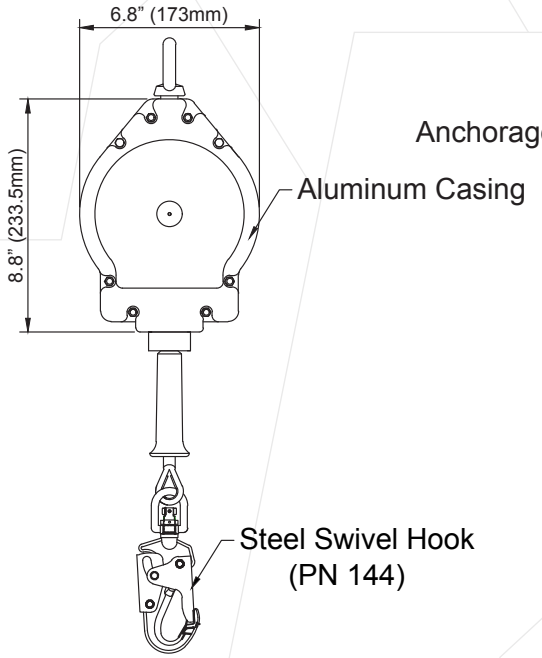

SIDE VIEW

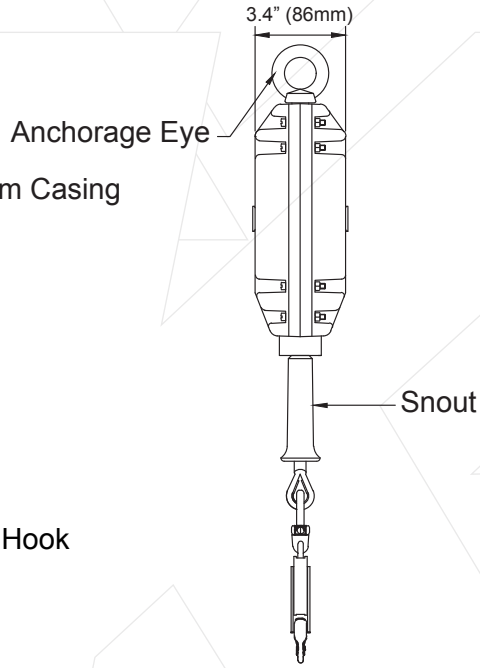

Batch #: _____ Serial #: _____
Date of First Use: _____