T-LINE 12M

AFA945012

The KStrong T-Line 12m AFA945012 is designed for use as an overhead twin lifeline fall arrest system by a Single User in Fall Arrest. Its two independent self-retracting lifelines let the user move freely, both horizontally and vertically, across spans of 5m to 12m, while minimising pendulum swing and fall arrest distance.

Features



- Supplied with 2 x T-Line Clevis Anchors (AFA945017), for mounting overhead to structural steel or a concrete soffit. T-Line Beam Clamp Anchors (AFA945026), sold separately, may be used to mount onto I-beams without drilling or welding. No other anchorage devices may be used. See User Instruction Manual (UIM) for installation requirements.
- Suitable for Fall Arrest.
- Maximum 1 user, with a total mass of 60kg to 140kg.
- May be used in Twin-Line or V-Line configuration, or in Single Line Mode for vertical access directly below the T-Line unit.
- Galvanised steel lifelines – for indoor installation and use only.
- Anchorage Structural Requirement for this product is 23kN at each anchorage.
- Horizontal span of 5m to 12m. Anchorage height above the working platform: min. 3.0m; max. Twin-Line 13m at a 5m span, reducing to 6m at a 12m span; max. V-Line 8m at a 5m span, reducing to 3m at a 12m span.
- Maximum fall arrest force on the user 6kN. Fall clearance required below the working platform at maximum span: V-Line 2.5m, Twin-Line 3.0m.
- Ø4.5mm 7x19 galvanised steel wire rope lifelines – main lifeline 15m, pulley lifeline 25m

How To Use

See User Instruction Manual (UIM) for details of how to install and use this product.

Components

High strength polymer casing, Ø4.5mm 7x19 galvanised steel wire rope lifelines, aluminium alloy karabiners and O-ring.

Supplied with 2 x T-Line Clevis Anchors (AFA945017).

Product Strength

Tested static strength 23kN.
Maximum fall arrest force on the user 6kN.

Weight

18.13kg

Relevant Standards

Conforms to EN 360:2023 and EN 1496:2017 Class B.

Meets the Requirements of AS/NZS 1891.4:2025.

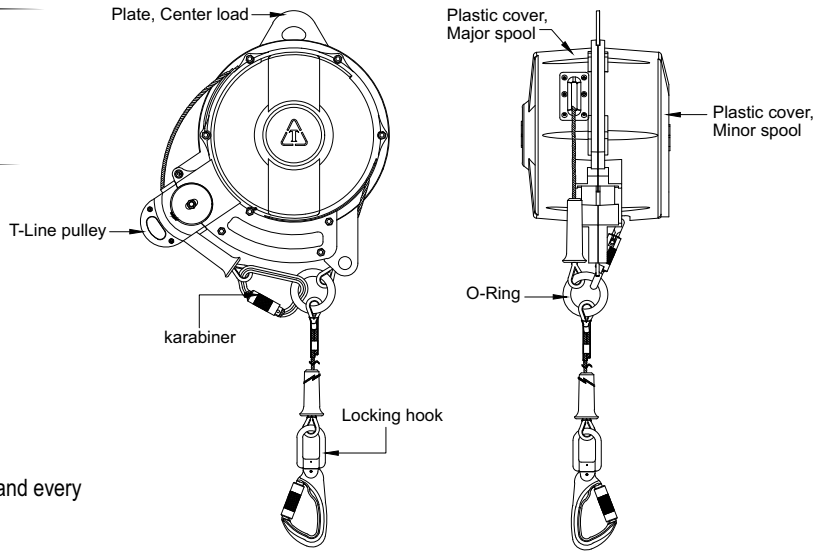

Inspection & Testing

This product should be inspected before and after use by the user, and every 12 months by a competent person other than the user.

When the T-Line Clevis Anchors are installed into concrete, each must also be load-tested to 50% of its strength rating (11.5kN), for a period of 3 minutes, as part of its inspection by a competent person.

This product also has a mandatory service interval of 3yrs for light use, 2 years for moderate-heavy use, and 1 year for extreme use.
Contact KStrong for your nearest Authorized Service Agent.