KStrong® Kaptor™ Webbing Tool Connector XL - 165mm, 1.36kg

Model: DL100354

KAPTOR™ TOOL LANYARDS

DESIGN

- XL tool attachment made in 15mm polyester webbing with swivel at one end and folded end at other end
- Provided with a lightweight swivel

MATERIAL

Webbing - 15mm Polyester.
Swivel - Alloy Steel

CAPACITY

1.36kg

LENGTH

165mm

WEIGHT

19 gm ± 2 gm

RELEVANT STANDARDS

Meets or Exceeds ANSI/ISEA 121-2018

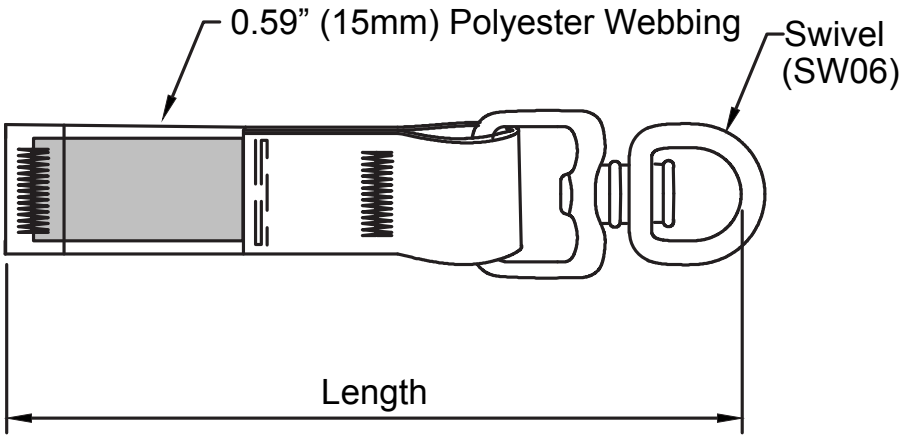

Length- 6.5" (165mm)

Meets or Exceeds ANSI/ISEA 121-2018